NOVAS

Entrance Handle Options

61019 Entrance Handle

Finish SSS, PSS

Standoffs 25mm Diameter Straight

A	150	300	450	600	850	1100	1350	1600	1850
B	32	32	32	32	32	32	32	32	32
C	45	45	45	45	45	45	45	45	45
D	300	450	600	750	1000	1250	1500	1750	2000
E	25	25	25	25	25	25	25	25	25

ORDERING EXAMPLE: 61019-13532SSS

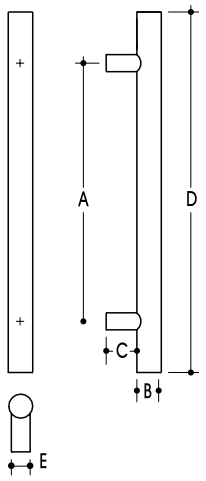

61019M Entrance Handle

Finish SSS,PSS

Standoffs 25mm Diameter, 45° Mitred / Offset

A	150	300	450	600	850	1100	1350	1600	1850
B	32	32	32	32	32	32	32	32	32
C	45	45	45	45	45	45	45	45	45
D	300	450	600	750	1000	1250	1500	1750	2000
E	25	25	25	25	25	25	25	25	25

ORDERING EXAMPLE: 61019M-4532SSS

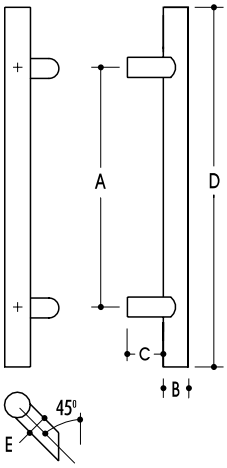

61019SQ Entrance Handle

Finish SSS,PSS

Standoffs 25mm Square Straight

A	150	300	450	600	850	1100	1350	1600	1850
B	32	32	32	32	32	32	32	32	32
C	45	45	45	45	45	45	45	45	45
D	300	450	600	750	1000	1250	1500	1750	2000
E	25	25	25	25	25	25	25	25	25

ORDERING EXAMPLE: 61019SQ-8532PSS

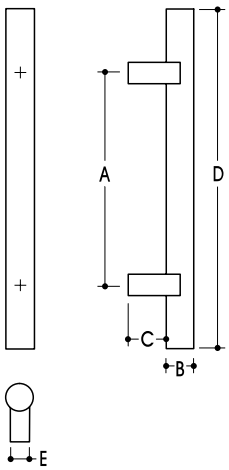

NOVAS

Novas Maintenance of Stainless Steel

Retaining the attractive finish of stainless steel is easy with a few simple maintenance steps. When maintained properly, stainless steel will retain its visual appeal and structural integrity in wide range of applications and environments.

Novas Stainless Steel products are designed to be durable, low maintenance, highly resistant to corrosion and easily maintained resulting in a high quality, pleasing appearance.

Cleaning Stainless Steel

Stainless Steel is best cleaned using a mild detergent and a soft cloth, after washing, rinse in clean, cold water and wipe the surface dry with a soft absorbent cloth. Drying afterwards ensures there no streaky marks on the surface.

Retaining Surface Integrity

Stainless looks best if its cleaned regularly and correctly which prevents stubborn stains building up. The level of cleaning and maintenance depends primarily on its environment where the product is situated.

1.Sea Side

When Stainless Steel is in a coastal environment, tea staining of surface can occur. Tea staining is discolouration of the surface of stainless steel by corrosion. It is a cosmetic issue that does not affect the structural integrity or the lifetime of the material. Discolouration or a tea staining effect most commonly occurs within 5 kilometres of the coast and becomes progressively worse closer to the water. Regular washing also removes deposits (such as salt) that can cause corrosion. In these instances, it is recommended that cleaning is performed fortnightly.

2.Interior

Dirt, grease and fingerprints can accumulate from many sources. These can be removed by routine cleaning using a mild detergent and a soft cloth. After washing, rinse in clean, cold water and wipe the surface dry with a soft absorbent cloth. Drying afterwards ensures there are no streaky marks left on the surface. If a mild detergent or dishwashing liquid doesn't shift unsightly stains/finger-marks, then wipe over with glass cleaner on a soft cloth. You can also use a small amount of alcohol, methylated spirits, acetone or mineral turpentine. Then rinse with clean water and dry. You can give longer protection to high traffic areas by lightly rubbing with olive oil or baby oil followed by a polish and shine using a soft cloth.

3.Exterior

In most exterior environments normal rain washing is sufficient, but in more polluted or coastal regions the surfaces will require regular washing to retain its pristine condition. (see above in Sea Side for more details) Discolouration or a tea staining effect most commonly occurs within 5 kilometres of the coast and becomes progressively worse closer to the water. For rust or tougher stains apply a cream cleanser with a soft damp cloth, rib gently then rinse with clean cold water. Dry with an absorbent soft cloth.

Surface Protection

It is important to know that Stainless Steel can be Scratched so it is important to be aware that hash abrasives, steel wool or plastics sources must NEVER be used. Cloths used to rub over the stainless steel must be free of gift or chemicals and always avoid vigorous rubbing.
String minerals acids such as hydrochloric, hydrofluoric acid or bleach should never be permitted to encounter stainless steel. If this should happen, the solution must be washed off immediately with plenty of water.
Never use oil based commercial cleaners as the residual oil film can result in an iridescent colour on Stainless Steel.

Environment	Maintenance Schedule
Seafront / Chlorinated Pool	Fortnightly
Coastal (within 5km of coast)	Monthly
Industrial and Urban	Every 3-6 months
Suburban Rural	Annually or as required
Internal	As required to maintain appearance

Please note: Unless regular maintenance of the Stainless Steel surface occurs to the appropriate schedule, the Novas Guarantee will be rendered void.

NOVAS

Handing

Right Hand Hinge	Left Hand Hinge
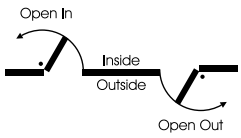	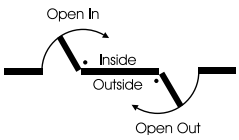

Drilling Details

TUBE SIZE	BOLT SIZE	GLASS DOOR HOLE SIZE	GLASS DOOR HOLE SIZE
ø 25	M8	ø 12	ø 12
ø 32	M8	ø 12	ø 12
ø 38	M8	ø 12	ø 12
ø 50	M8	ø 12	ø 12

Accessories - Fixing Disk

DISK DIA	DOOR THICKNESS UP TO 15MM (L-25MM)	DOOR THICKNESS UP TO 55MM (L-65MM)	DOOR THICKNESS UP TO 100MM (L-110MM)
ø 25	61FDG25	61FDTM25	61FDTM25100
ø 32	61FDG32	61FDTM32	61FDTM32100
ø 38	61FDG38	61FDTM38	61FDTM38100
ø 50	61FDG50	61FDTM50	61FDTM50100

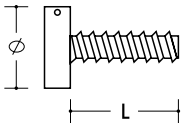

Accessories - Fixing Bolt

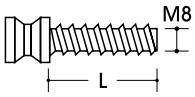

To suit ø25mm, ø32mm, ø38mm, ø50mm Handles

L	DOORTHICKNESS	PART NO.
25mm	up to 15mm	61BTBG19/25/32
65mm	up to 55mm	61BTBTM19/25/32
110mm	up to 100mm	61BTB10019/25/32

NOVAS

Fixing Options

Fixing

Entrance Handles are available with fixings to suit Timber, Metal or Glass Doors.

Door Thickness

Standard fixings suit maximum 15mm thick glass doors and maximum 55mm thick timber/metal doors. Additional fixings available to suit special applications upon request.

BG - BACK TO BACK , GLASS DOORS

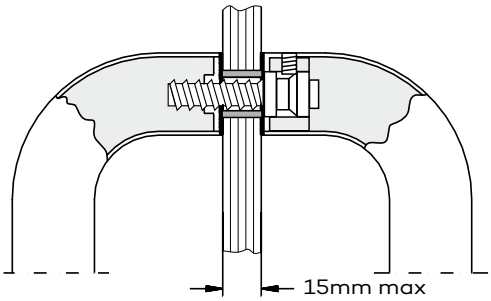

BG - BACK TO BACK FIXING , TMBER/METALGLASS DOORS

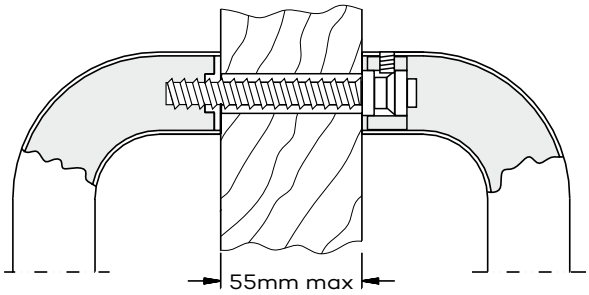

DG - SINGLE DISK FIXING , GLASS DOORS

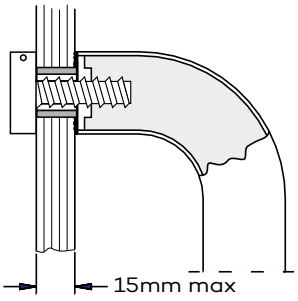

DT - SINGLE DISK FIXING , TIMBER /METAL DOORS

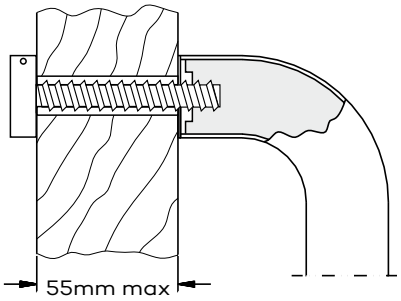
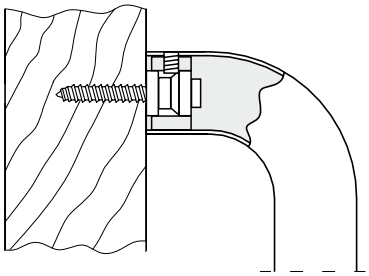
ST - SINGLE FIXING , TIMBER DOORS